Moore Industrial Hardware
77 Circle Freeway Dr.
Cincinnati, OH 45246
800-543-1677
info@mooreindhardware.com

2-Point Dead Bolt Lock Kit
Price: $51.43

SKU: 5658-82X-ZN
Product Type: Dead Bolt Cabinet Locks
Product Page: https://www.mooreindhardware.com/hardware/2-point-dead-bolt-lock-kit-2/

Product Summary

Lock Kit includes (1) 2 Point Center Control, (2) 32" Round Rods, (2) Tapered End Bolts and (2) End Bolt Cases.

Product Attributes
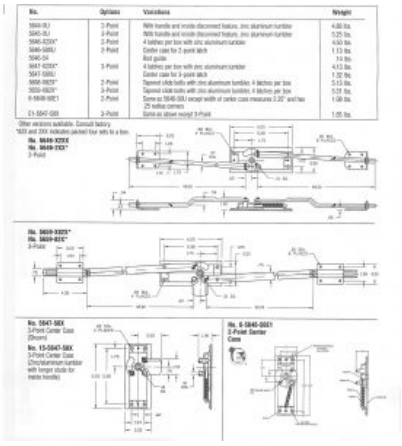
- Dimensions: 32.00 × 2.50 × 1.30 in
- Weight: 5.2 lbs
- Item #: 5658-82X-ZN
- Material: Steel
- Item Name: Deadbolt Lock Kit
- Type: 2 Point
- Rod: Flat
- Finish: Zinc
- Variations: 32" Rod
- List Price: 53.02
- Weight: 5.2